Automatic Temperature Control System using Arduino

Kyi Kyi Khaing
Professor, Myanmar Institute of Information Technology (MIIT), Mandalay
kyi_kyi_khaing@miit.edu.mm

K Srujan Raju
Professor, CMR Technical Campus Hyderabad, India
drksrujanraju@gmail.com

G.R. Sinha
Professor, Myanmar Institute of Information Technology (MIIT), Mandalay (Adjunct Professor, IIIT Bangalore)
gr_sinha@miit.edu.mm

Wit Yee Swe
Assistance Lecturer, Myanmar Institute of Information Technology (MIIT), Mandalay
wit_yee_swe@miit.edu.mm

Abstract— Automatic temperature controls system is an important applications used in almost all modern gadgets and smart homes. The system for controlling temperature automatically is achieved by using Arduino UNO based microcontroller system. Arduino UNO due to its increased popularity, findings its varied range of applications. Temperature sensor LM35 and Arduino UNO are the hardware used interfaced with computer and the temperature is controlled in room. Temperature is displayed on LCD display employing A1 pin of hardware with the help of analog pin utilizing PWM (pulse width modulation). We have designed temperature control as automatic system that has been not attempted before the way it has been implemented.

Keywords- Temperature control, Arduino Uno, Temperature sensor, LCD display.

I. INTRODUCTION

Temperature control becomes important task in many of automatic operations. There are sensors, right from simple to smart sensors that are used for detecting the temperature. The environmental monitoring application, room temperature control are few of popular examples of temperature control. Now, with the advent of new technologies; hardware and software support; temperature can be controlled, monitored and recorded more flexibly and with the programmable ways [1-4]. ICT (information and communication technology) or smart appliances are using some sort of temperature control; this may be AI (artificial intelligence) based refrigerator or washing machine.

Microcontroller based temperature control has become so important that it acts as benchmark for testing and simulation of particular sensors for detection and monitoring of temperature automatically. Various types of projects like minor projects as well as major projects are carried out on suitable hardware and software platform [4-9].

This paper presents an application of control theory using ICT and hardware based temperature control including design of a circuit (hardware) and implementation and testing on Arduino Uno board. The test results are displayed with the help of LCD display. The program is written in Arduino IDE and facilitates the display of temperature in degree centigrade and also in Fahrenheit. The Ardunio UNO board facilitates the temperature measurement s input to the fan; cooling system on/off that is automatically done based on varied values of temperature.

II. RELATED RESEARCH AND PROBLEM IDENTIFICATION

In existing literature, there are many research papers are temperature control but very few of them have used Arduino for automatic control of temperature, especially for monitoring applications. We studied several papers and here few of important contributions are presented.

Atilla et.al (2016) presented a case study that the design of heating system controlled by Arduino; has studied the technology, software, hardware used in the heating system, which consists of isolated box, dry resistance, voltage regulator, thermocouple, air fan, microcontroller and computer. PID (Proportional Integral Derivative), neural network, fuzzy-logic are mainly used for the temperature control of heating systems. The system uses PID controller and exhibits satisfactory value of stability; good reliability and sensitivity also. Microcontroller based temperature control

was designed with comparing theoretical values of temperature. However, Arduino control and implementation was not done [1].

Abdullah et al. (2016) suggested a design of temperature control system and implemented on TudungSaji microcontroller. Hardware implementation as well as software simulation were tested and obtained. The purpose of this work includes protection against bacteria after certain value of temperature. The application seems to be very good controlling and rather preventing from bacteria since after certain temperature the bacteria can be killed. This could be also tested on Arduino IDE system [2]. Wayan et.al (2017) proposed development and design of temperature distribution control for baby incubator application. In this system, it is very important to maintain certain temperature inside the room to take care of proper health of a baby. Humidity was also included in the study of experiment using microcontroller based system for temperature measurement and control. This proved to be very important application for baby care and health [3].

Nagendra et al. (2017) presented a design and implementation of Arduino based temperature sensor that was also used to measure humidity level [4]. Kanishak et al. (2016) brought out a case study on temperature control systems using microcontroller, TRIAC and bridge rectifiers [5]. Vaibhav et al. (2013) implemented speed control system based on change in temperature, for changing temperature measurement, the temperature control system was used. PWM and a simulation software were used to design the hardware and simulate on computer [6]. Theophilus et al. (2012) presented a testing of temperature monitoring mechanism with the help of Atmel Atmega 8385 system and LM35 temperature sensor [7].

Kiranmai et al. (2018) also proposed a temperature control system and it was claimed that it's very useful for IoT (internet of things) related applications. However, the real time application for any such application was not tested [8]. Singhala et al. (2014) studied a fuzzy based temperature control system that was completely simulation based and no hardware implementation was achieved. The system suggested was very simple and effective but hardware implementation and realization remain as future scope of the work [9].

Muhammad [10] designed a PID controller and implemented on Virtual lab platform, LabVIEW of National Instruments. It was suggested that Arduino based hardware realization would produce much relevant and appropriate results for temperature control. Samil et al. (2016) employed the concept of PWM and displayed the values of temperature using LCD displays [11]. Masstor et al. (2015) suggested a case study for alarm system based on sensing temperature and humidity. Arduino controlled GSM/GPRS module was suggested but temperature measurement was not accurate in the system [12]. Okpagu et al. (2016) suggested a development of temperature control system for egg incubator system utilizing sensors, PID controllers, LCD displays, DC motors and fan control system. This is very important type of incubator system because it becomes essential to monitor embryo and its growth and therefore temperature control and monitoring played important role in this system [13].

Christina et al. (2010) presented a case study of light and humidity control including temperature control also. Light sensor, temperature sensor and Arduino hardware were interface with computer and the work was implemented. Basically, the work was suggested for environmental monitoring for hospital application [14]. Merean et al. (2016) proposed a design and development of remote controlled temperature monitoring system. Arduino based work aims at providing a viable solution to the environmental monitoring and care [15].

Summarizing the current literature, temperature control that too automatic way of monitoring has not been attempted by the researchers mainly on temperature in focus of research. We suggest an Arduino control and hardware based temperature control system, mainly highlighting temperature monitoring and measurement.

III. HARDWARE IMPLEMENTATION

Hardware implementation was obtained on Arduino IDE interfaced with P-IV computer. Data flow and block diagram of the hardware implementation are shown in Fig. 1 and Fig. 2 respectively.

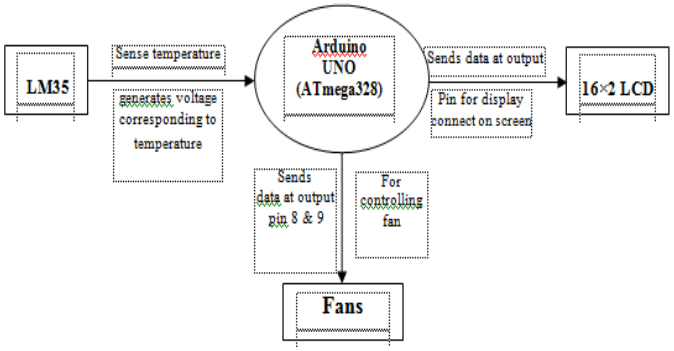

Figure 1: Data Flow in hardware implementation.

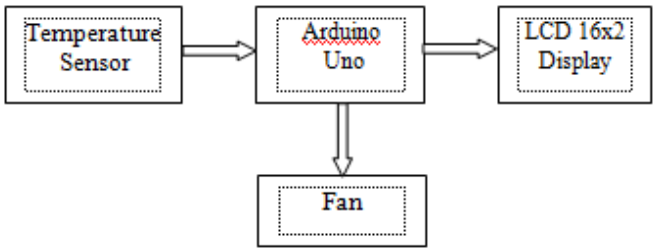

Figure 2: Block Diagram of temperature control hardware.

Figure 1 and Figure 2 are simple and self-explanatory where temperature sensors is connected with the help of Ardunio and LCD display of 16 x 2 matrix. The fan was additionally connected for cooling mechanism so that automatic control could be achieved which is main objective of the proposed work. The hardware design is very simple without any circuit complexity.

We used temperature sensor IC LM35 that helps in generating a small voltage for detecting the change in temperature across the temperature sensor. The generated voltage was continuous and analog signal generated through analog pin of Arduino hardware. Arduino (ATmega328) controller was used and the voltage is taken as analog input in port 1 (A1) of Arduino UNO. The hardware reads the analog signal and it is then converted into suitable digital output with the help of appropriate ADC (analog to digital converter) circuit that is inbuilt in it. ADC has maximum capacity of 10-bits output generating from 0 to 1023 (1024 combinations).

Digital data corresponding to analog input received through the port is converted and multiplied by a coefficient 0.488 just to normalize in centigrade. Similarly, suitable multipliers such as 1.8 and afterwards adding with 32 used to convert the temperature measurement in Fahrenheit scale. The hardware sends the data to 16x2 LCD display which is connected with controller, as shown in Fig.3. Pin 1and pin 2 is connected to Ground and supply VCC respectively through Arduino for activating or switching ON the LCD. Pin 3 enables through 10K resister as adjustment of brightness value of LCD display.

So, the display can be made on both the scales of temperature. A control bit, either 0 or 1 is also sent by the Arduino to port 6 basically for providing control application. Pins 8 and 9 can be seen connected with fans just to adjust, normalize and automatically control the temperate. Whenever temperature goes down after certain value, the fans will be OFF else it will keep running. This is how the control of temperature becomes automatic.

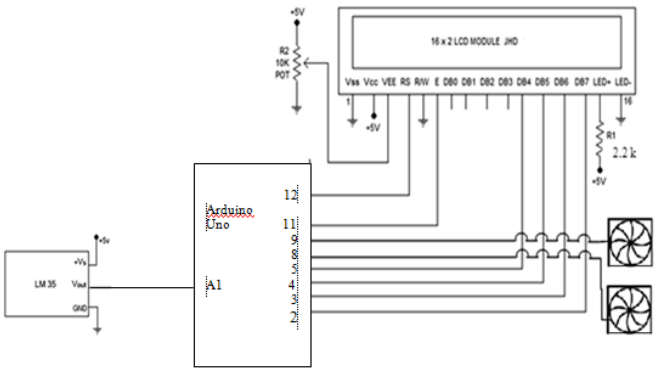

Figure 3: Temperature control system.

IV. RESULTS

Though, experimental set up was done and lot of temperature measurement was recorded with suitable displays. Few of sample displays and the observations are presented here with brief discussion.

Mainly, we have two outputs in this work: one for displaying the temperature automatically on LCD display and second was even important that is for automatic switching ON/OFF of fans so as to monitor the temperatures on automatic basis.

LCD display produces the output of temperature as well as the status of fans. For example, in Fig. 4, it can be seen that 28 degree centigrade is being displayed by the LCD display along with status of fan as ON. Actually, the running condition of fans depends on the threshold value set. We set 25 degree centigrade as the value and therefore it can be seen that for 28 degree centigrade fan is running (that is in ON condition). Obviously, for below, for example 23 degree centigrade, the fan will go OFF. The interface of display with bread board and Arduino hardware can be seen in Fig. 4.

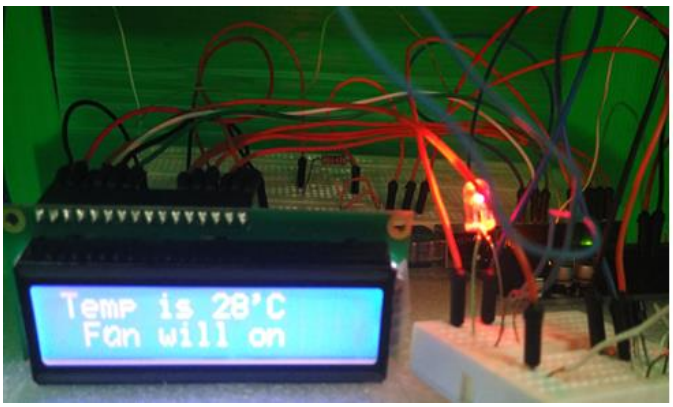

Figure 4: Displya of temperature and status of fan in automatic control of temperature.

V. CONCLUSIONS

We have designed a simple method of temperature control system automatically. Utilizing the concept cooling after certain temperature, Arduino based hardware along with display were realized in hardware. Few samples are shown in result but any value of temperature can be generalized ii n this work. The work is focused mainly on temperature control and no other parameter is involved. This seems to be robust way of handling only temperature control on automatic basis. This can be extremely useful for persons of physical disability. Soft computing method could be used to make it more robust and fuzzy controlled.

REFERENCES

1. Atilla Bayram, Sulaiman Abdullah Moammed and Fırat Kara, Design of Heating System Controlled by Arduino, 4th International Symposium on Innovative Technologies in Engineering and Science. pp. 1583-1591, 2016.
2. Rina Abdullah, Zairi Ismael Rizman, Nik Nur Shaadah Nik Dzulkefli, SyilaIzawana Ismail, Rosmawati Shafie and Mohamad Huzaimy Jusoh, Design an Automatic Temperature Control System for Smart Tudung Saji Using Arduino Microcontroller. ARPN Journal of Engineering and Applied Sciences; 11(16), pp.9578-9581, 2016.

3. W. Widhiada, D. N. K. P. Negara, P. A. Suryawan, Temperature Distribution Control for Baby Incubator System Using Arduino ATMega 2560. Bali Indonesia; 19(20) part xv, pp.1748-1751, 2017.
4. Nagendra Dangi, Monitoring environmental parameters: humidity and temperature using Arduino based microcontroller and sensors, 2017.
5. Kanishak Kesarwani, S. M. Pranav, Tanish Nikhilesh Noah and K. V. N. Kavitha, Design of Temperature Based Speed Control System UsingArduinoMicrocontroller.www.sadgurupublications.com. 14(S3), pp.753-760, 2016.
6. Vaibhav Bhatia, Gavish Bhatia, Room Temperature based Fan Speed Control System using Pulse Width Modulation Technique. International Journal of Computer Applications (0975 – 8887). 81(5), pp.35-40, 2013.
7. Theophilus Wellem and BhudiSetiawan, A Microcontroller- based Room Temperature Monitoring System .International Journal of Computer Applications, 53(1), pp.7-10, 2012.
8. Kiranmai Nandagiri and Jhansi Rani Mettu, Implementation of Weather Monitoring System. International Journal of Pure and Applied Mathematics. 118(16), pp.477-494, 2018.
9. P. Singhala, D. N. Shah, B. Patel, Temperature Control using Fuzzy Logic. International Journal of Instrumentation and Control Systems (IJICS), 2014.
10. H. Muhammad Asraf , K.A. NurDalila, A.W. Muhammad Hakim and R.H. Muhammad Faizzuan Hon, Development of Experimental Simulator via Arduino-based PID Temperature Control System using LabVIEW. Journal of Telecommunication, Electronic and Computer Engineering. 9(1-5), pp.53-57.
11. K. Sami, M. Lavanya, M. Arivalagan, Yathrasi Sree Harsha, Temperature Controlled based cooler Pad using Arduino, Journal of Chemical and Pharmaceutical Sciences. pp. 216-220, 2016.
12. Norhidayah Binti Masstor, Temperature Alert Alarm System (TAAS), 2015.
13. Okpagu, P. E. & Nwosu, A. W, European Journal of Engineering and Technology, 2(7), pp 13-21, 2016.
14. Christina Tan, Integrated Temperature, Light and Humidity Monitoring System, 2010.
15. Meream Eltrubaly, Remote Temperature Monitoring of Electronic Systems. Blekinge Institute of Technology. pp. 1-29, 2016.